AGRICULTURAL MACHINERY

sitrex® s.r.l.

FS / HS500 SPREADER

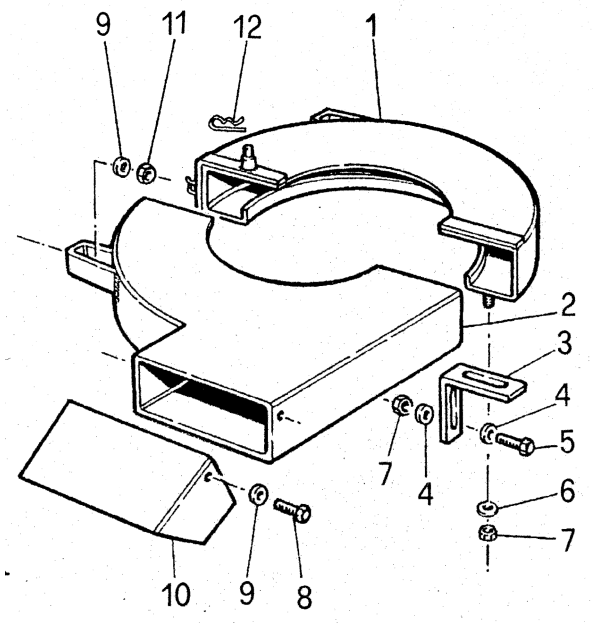

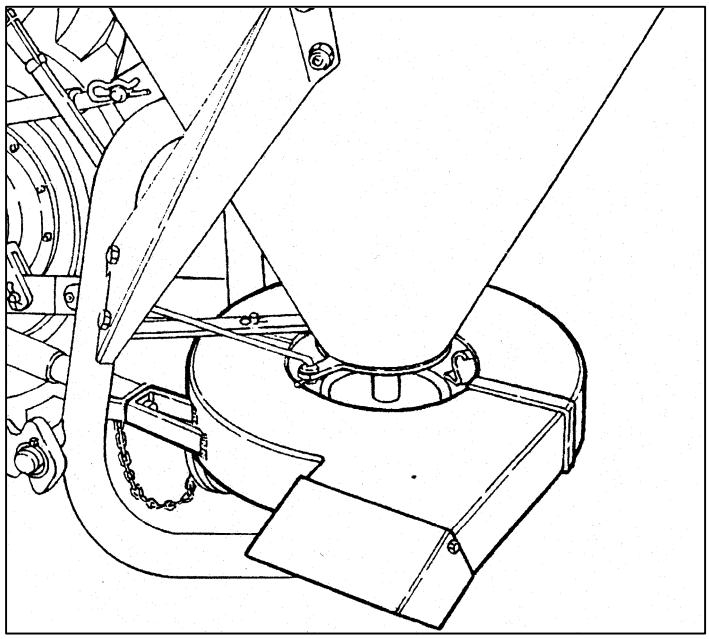

HS SIDEATTACHMENT CONVEYOR KIT PART NO. 400.168

Notes:

- Kit shown is earlier round body style, current kits hexagonal profile.
- Assembly and mounting detail similar.
- Individual parts not available – complete kit only stocked.

ITEM	Q.ty	PART NO.	DESCRIPTION	Note
*	1	400.168	CONVEYOR KIT, COMPLETE	
1	1	400.169	CONVEYOR LH	*
2	1	400.170	CONVEYOR RH	*
3	1	400.171	BRACKET	*
4	5	600.089	WASHER	*
5	1	600.616	SCREW	*
6	1	610.300	WASHER	*
7	2	600.008	NUT	*
8	2	600.060	SCREW	*
9	3	600.992	WASHER	*
10	1	400.172	DEFLECTOR	*
11	1	600.993	NUT	*
12	1	610.279	SPLIT PIN	*